SIMON FRASER UNIVERSITY

School of Mechatronic Systems Engineering

30

MSE 429/894 – Assignment 2

Problem 1: Consider the **3*R*** non-planar robot arm shown below. Derive Denavit-Hartenberg parameters and use them to identify kinematic equations for ${}^{B}_{W}T$. Note that no L_3 need be defined.

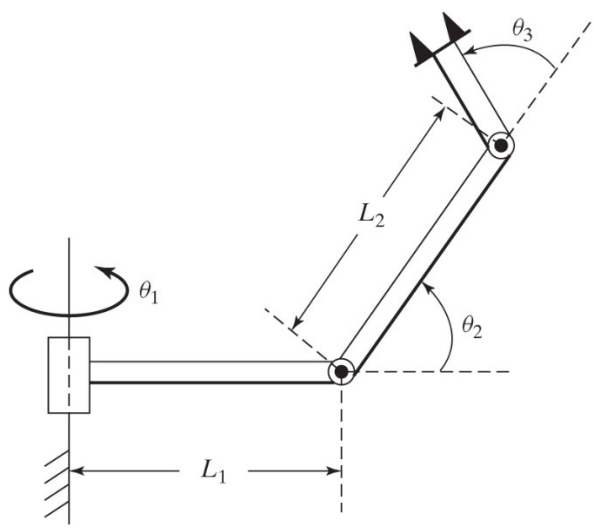

Solutions:

α_{i-1}	a_{i-1}	d_i
0	0	0
90°	L_1	0
0	L_2	0

6

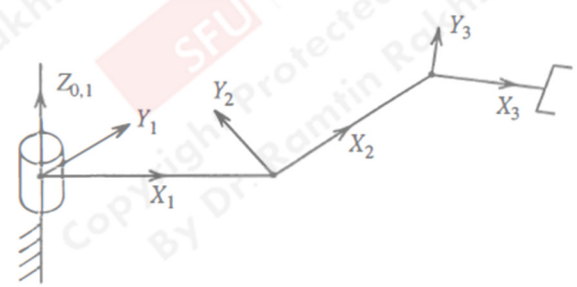

6 $${}^{0}_{1}T = \begin{bmatrix} C_1 & -S_1 & 0 & 0 \\ S_1 & C_1 & 0 & 0 \\ 0 & 0 & 1 & 0 \\ 0 & 0 & 0 & 1 \end{bmatrix} \quad {}^{1}_{2}T = \begin{bmatrix} C_2 & -S_2 & 0 & L_1 \\ 0 & 0 & -1 & 0 \\ S_2 & C_2 & 0 & 0 \\ 0 & 0 & 0 & 1 \end{bmatrix}$$ 6

6 $${}^{2}_{3}T = \begin{bmatrix} C_3 & -S_3 & 0 & L_2 \\ S_3 & C_3 & 0 & 0 \\ 0 & 0 & 1 & 0 \\ 0 & 0 & 0 & 1 \end{bmatrix} \quad {}^{B}_{W}T = {}^{0}_{3}T = {}^{0}_{1}T\,{}^{1}_{2}T\,{}^{2}_{3}T$$ 3

$${}^{B}_{W}T = \begin{bmatrix} C_1C_{23} & -C_1S_{23} & S_1 & L_1C_1 + L_2C_1C_2 \\ S_1C_{23} & -S_1S_{23} & -C_1 & L_1S_1 + L_2S_1C_2 \\ S_{23} & C_{23} & 0 & L_2S_2 \\ 0 & 0 & 0 & 1 \end{bmatrix}$$ 3

Copyright Protected Material By Dr. Ramtin Rakhsha

Problem 2: Shown below is an arm with three degrees of freedom for which, joints 1 and 2 are perpendicular, and joints 2 and 3 are parallel. All joints are at their zero location. Note that the positive sense of the joint angle is indicated. Assign link frames {0} through {3} for this arm (sketch the arm and show the attachment of the frames.) Derive Denavit-Hartenberg parameters and use them to find the transformation matrices ${}^0_1T$, ${}^1_2T$, and ${}^2_3T$.

15

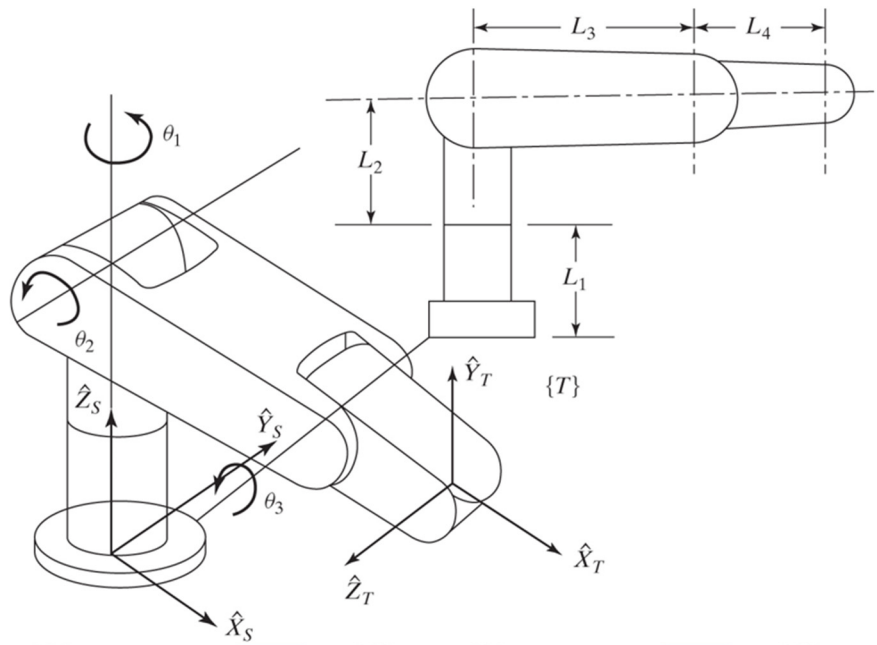

Solutions:

α_{i-1}	a_{i-1}	d_i	θ_i
0	0	$L_1 + L_2$	θ_1
90°	0	0	θ_2
0	L_3	0	θ_3
0	L_4	0	0

6

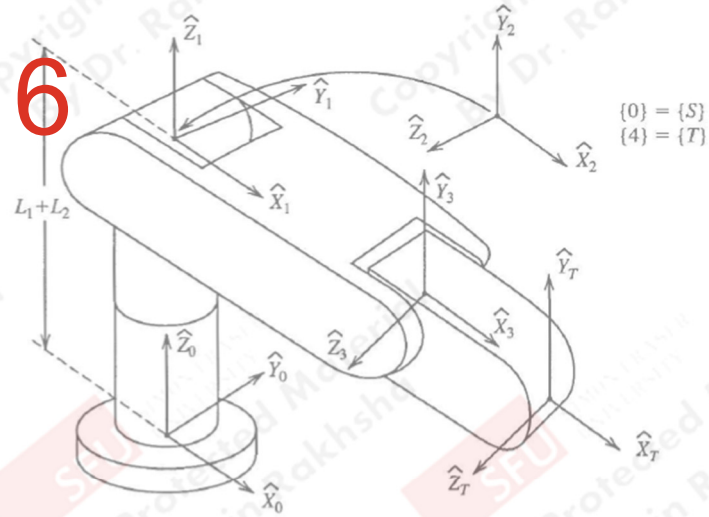

$$ {}^0_1T = \begin{bmatrix} C_1 & -S_1 & 0 & 0 \\ S_1 & C_1 & 0 & 0 \\ 0 & 0 & 1 & L_1+L_2 \\ 0 & 0 & 0 & 1 \end{bmatrix} $$

3

$$ {}^1_2T = \begin{bmatrix} C_2 & -S_2 & 0 & 0 \\ 0 & 0 & -1 & 0 \\ S_2 & C_2 & 0 & 0 \\ 0 & 0 & 0 & 1 \end{bmatrix} $$

3

$$ {}^2_3T = \begin{bmatrix} C_3 & -S_3 & 0 & L_3 \\ S_3 & C_3 & 0 & 0 \\ 0 & 0 & 1 & 0 \\ 0 & 0 & 0 & 1 \end{bmatrix} $$

3

Problem 3: For the two-link manipulator shown below, the link transformation matrices ${}^0_1T$ and ${}^1_2T$ were constructed. Their product is:

10

$$ {}^0_2T = \begin{bmatrix} c\theta_1 c\theta_2 & -c\theta_1 s\theta_2 & s\theta_1 & L_1 c\theta_1 \\ s\theta_1 c\theta_2 & -s\theta_1 s\theta_2 & -c\theta_1 & L_1 s\theta_1 \\ s\theta_2 & c\theta_2 & 0 & 0 \\ 0 & 0 & 0 & 1 \end{bmatrix} $$

The link-fame assignments are indicated in figure (b). Note that frame {0} is coincident with frame {1} when $\theta_1 = 0$. The length of the second link is L_2. Find an expression for the vector ${}^0P_{tip}$, which locates the tip of the arm relative to the {0} frame.

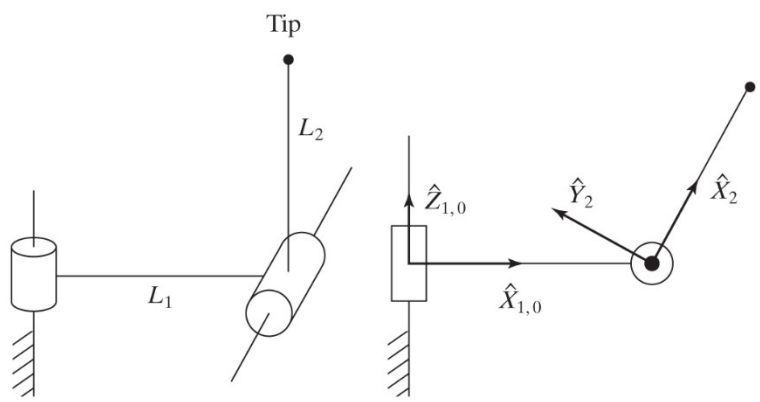

(a) (b)

Solutions:

$$ {}^0P_{TIP} = {}^0_2T\,{}^2P_{TIP};\ {}^2P_{TIP} = \begin{bmatrix} L_2 \\ 0 \\ 0 \end{bmatrix} $$

5

$$ {}^0P_{TIP} = \begin{bmatrix} C_1C_2 & -C_1S_2 & S_1 & L_1C_1 \\ S_1C_2 & -S_1S_2 & -C_1 & L_1S_1 \\ S_2 & C_2 & 0 & 0 \\ 0 & 0 & 0 & 1 \end{bmatrix} \begin{bmatrix} L_2 \\ 0 \\ 0 \\ 1 \end{bmatrix} $$

$$ = \begin{bmatrix} L_1C_1 + L_2C_1C_2 \\ L_1S_1 + L_2S_1C_2 \\ L_2S_2 \end{bmatrix} $$

5

Copyright Protected Material By Dr. Ramtin Rakhsha

Problem 4: Show the attachment of link frames for the 5-DoF $\boldsymbol{2RP2R}$ manipulator shown schematically below.

15

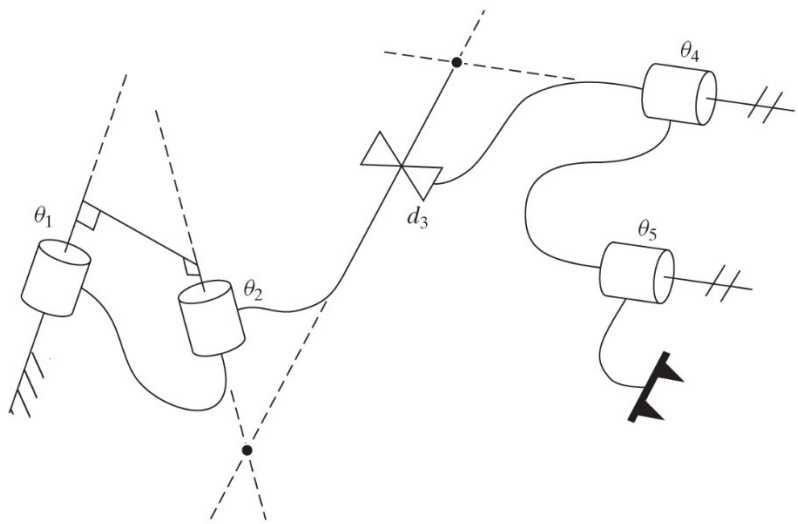

Solutions:

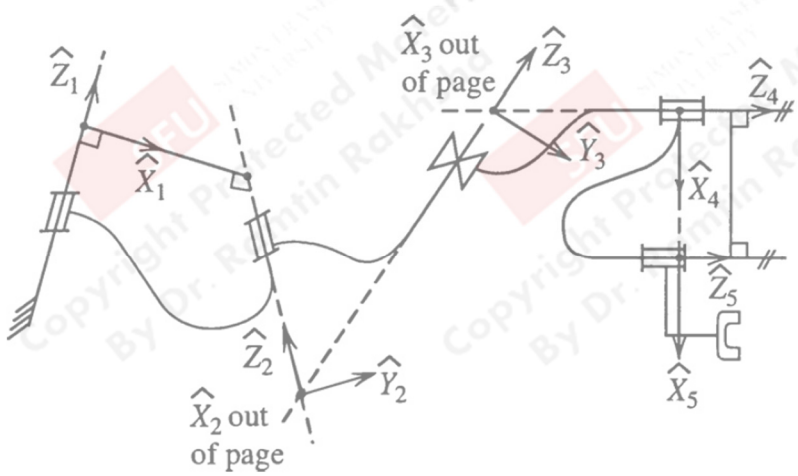

Copyright Protected Material By Dr. Ramtin Rakhsha

Problem 5: Show the attachment of link frames on the ***P3R*** shown below. Given your frame assignments, what are the signs of d_2, d_3, and a_2?

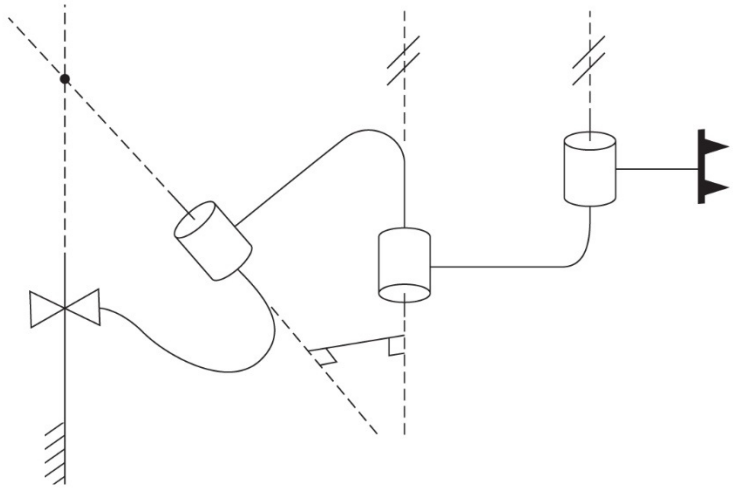

Solutions:

$\{y\}$ could be placed differently. Namely, with $d_3 > 0$.

$d_2 > 0$

$d_3 = 0$

$a_2 > 0 (a_i > 0$ always)

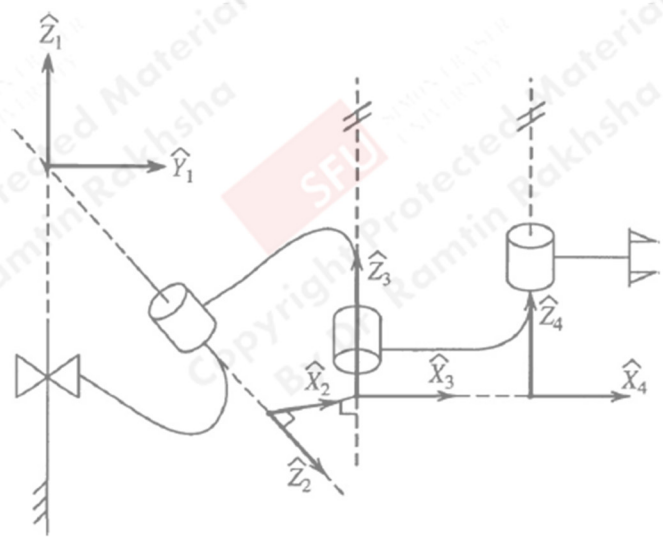

Copyright Protected Material By Dr. Ramtin Rakhsha

Problem 6: Three manipulators are shown below. Find the Denavit-Hartenberg parameters for each one of them.

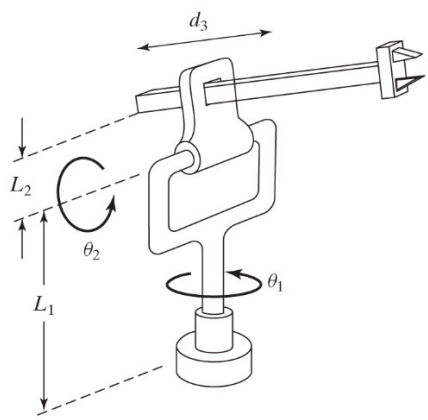

a) Three-link ***RRP*** manipulator.

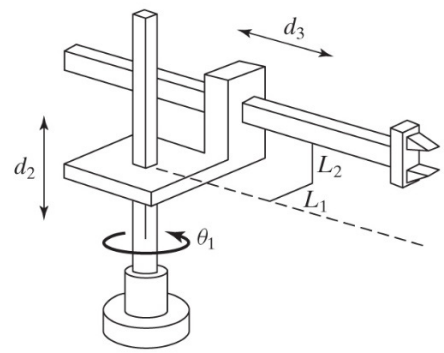

b) Three-link ***RPP*** manipulator.

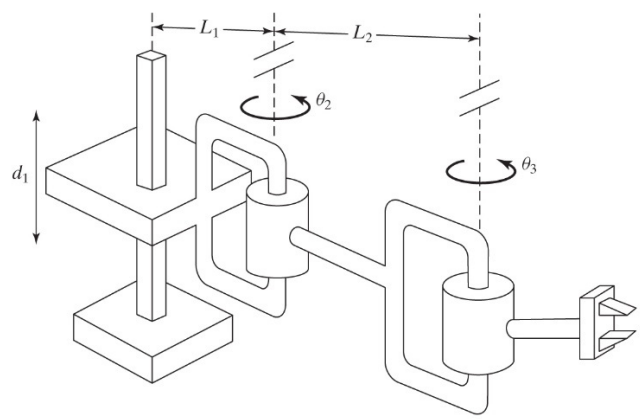

c) Three-link ***PRR*** manipulator.

Solutions:

a)

i	α_{i-1}	a_{i-1}	d_i	θ_i
1	0	0	0	θ_1
2	90	0	0	θ_2
3	90	l_2	d_3	0

5

b)

i	α_{i-1}	a_{i-1}	d_i	θ_i
1	0	0	0	θ_1
2	0	l_2	d_2	0
3	90	0	d_3	0

5

c)

i	α_{i-1}	a_{i-1}	d_i	θ_i
1	0	0	d_1	0
2	0	l_1	0	θ_2
3	0	l_2	0	θ_3

5

Copyright Protected Material By Dr. Ramtin Rakhsha